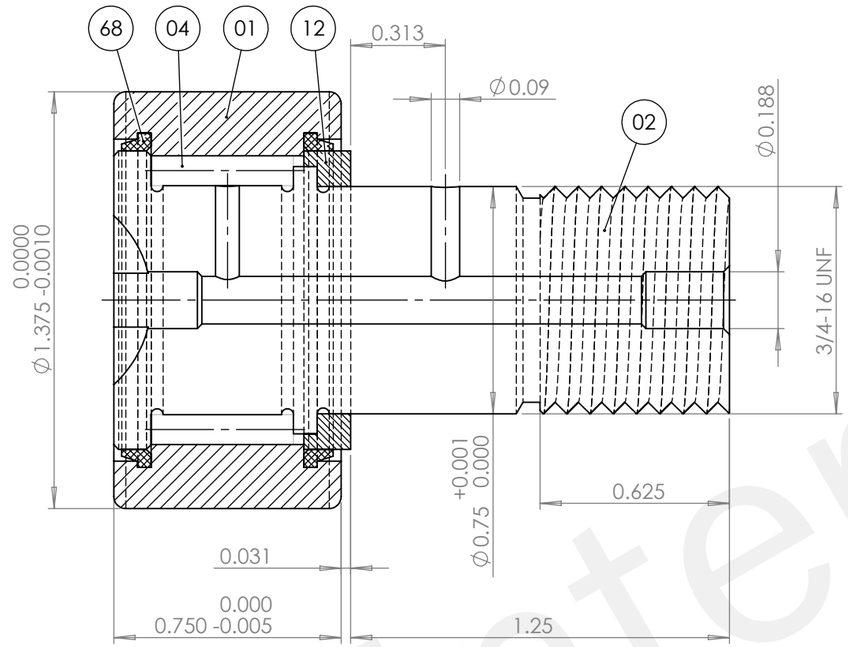

SECTION A-A

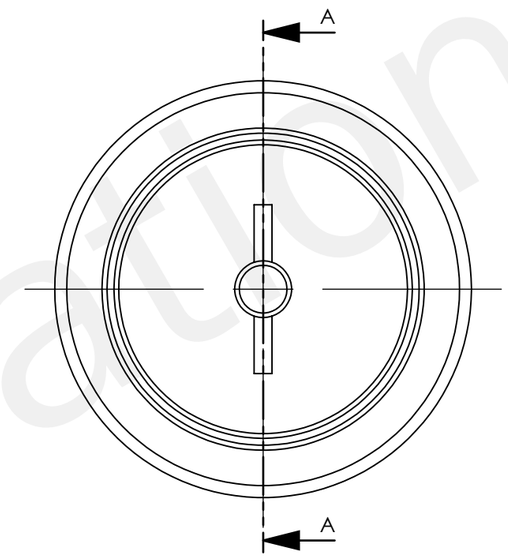

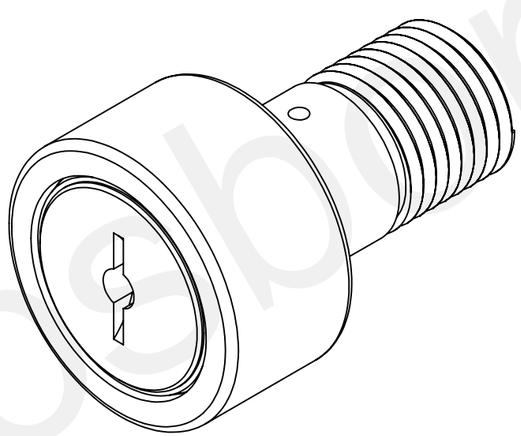

NO.	NAME	Q'TY
68	SEAL RING	2
12	LOOSE RIB	1
04	NEEDLE ROLLER (P2.5X11.8)	23
02	SHAFT	1
01	OUTER RING	1

Notes:
1. Rated Load: Cr=14.2 KN, Cor=18.4 KN
2. Radial internal clearance:0.020-0.045mm
3. Bearing surfce Black oxidation
4. Grease:shell Grease
5. Shape location Tolerance should be to current standard.

Units are in Inches
ASME Y14.5
X.X ± 0.040
X.XX ± 0.015
X.XXX ± 0.005
X.XXXX ± 0.0005

Third Angle Projection

Passing on and copying of this document, use and its contents is not permitted unless expressly permitted. Violators are liable for damages. All rights for the Case of patent award or utility model registration. (DIN34/ISO16016)

Weitergabe sowie Vervielfältigung dieser Unterlage, Verwertung und Mitteilung ihres Inhalts nicht gestattet, soweit nicht ausdrücklich erlaubt. Zuwiderhandlungen verpflichten zu Schadenersatz. Alle Rechte für den Fall der Patenterteilung oder Gebrauchsmuster-Eintragung vorbehalten. (DIN34/ISO16016)

	Date	Name
Drawn	2016/11/21	AS
Check	-	-
Aprv	-	-
Department	LoadRunner	

Rev	ECN	Description	Date	Name
-	-	-	-	-
-	-	-	-	-
+	-	Initial Release	-	-

Made From: -

State: Approval Pending | QTY: | Scale: 2:1

Material: -

Finish: -

Hardness: - HRC

Name / Title: STUD TYPE TRACK ROLLER BEARING

Mat'l Dims: CFH 1-3/8 S

Description: HD w/Seals

Machine Name: - | Machine No: -

Tool Name: - | Tool No: -

Drawing Number: 0009217100

SAP Part Number: -

Sheet Size ANSI B 1 of 1

Replacement for: - | Replaced by: -

osborn International